Power Supplies

- DC power supplies can either be direct or generated from AC.
- A generic power source is often indicated by a circle.

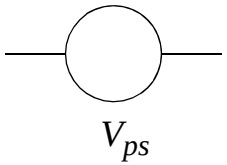

- A direct DC source is indicated as a battery (or photocell)

- If the DC source is from a photocell, the symbol will reflect that.

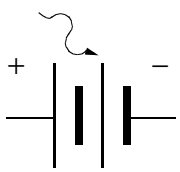

Power Load

- Real power supplies have internal resistance in addition to any resistive load.

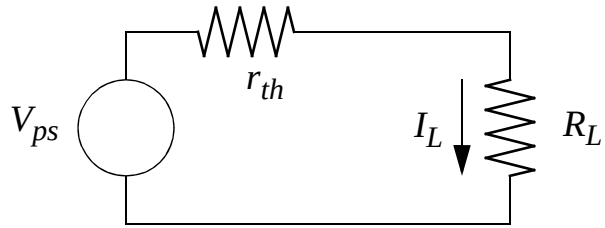

- Loads require voltage and draw current from a power supply.

- Power supplies dissipate heat through their internal resistance.

$$P = (I_L)^2 r_{th}$$

- In general power supplies convert voltage from a larger source V_{in}.
- If a supply has a maximum rating of V_{max}, I_{max}, then

$$P = (V_{in} - V_{max}) I_{max}$$

- Many power supplies use metal fins to increase their ability to dissipate heat.

Power Line Interference

- Loads such as amplifiers draw current.
- Both the power supply and wires have resistance drops.
- Long wires with loops to ground can pick up electromagnetic signals.
- Input signals have frequency-dependent fluctuations.

- Connecting power in series exacerbates the problem.

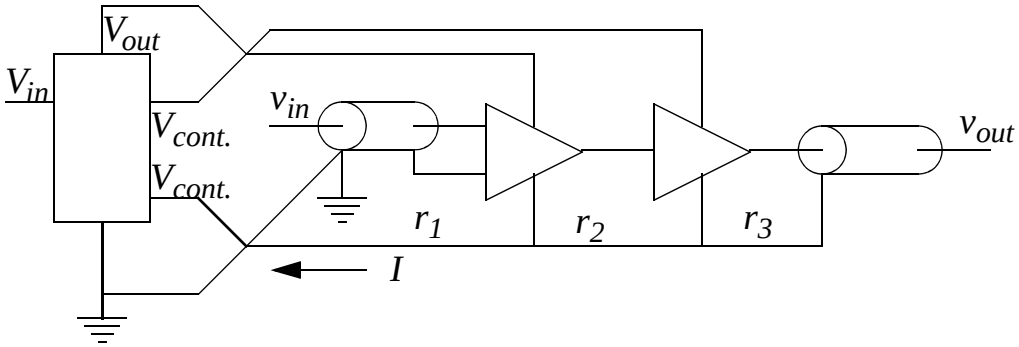

Improved Power Connnections

- Reconnect common ground and power connections.

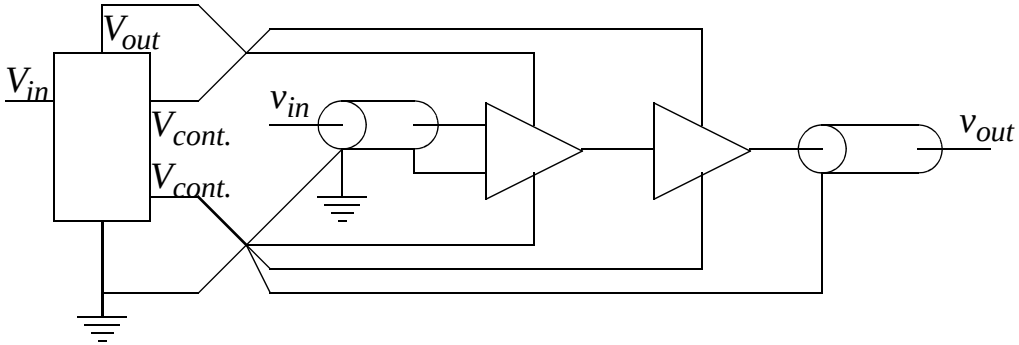

- All power and ground connections are at a single point.
- This prevents voltage drops along wires carrying supply voltage.

- Better can be to float the input ground into amplifiers; keep the difference constant.

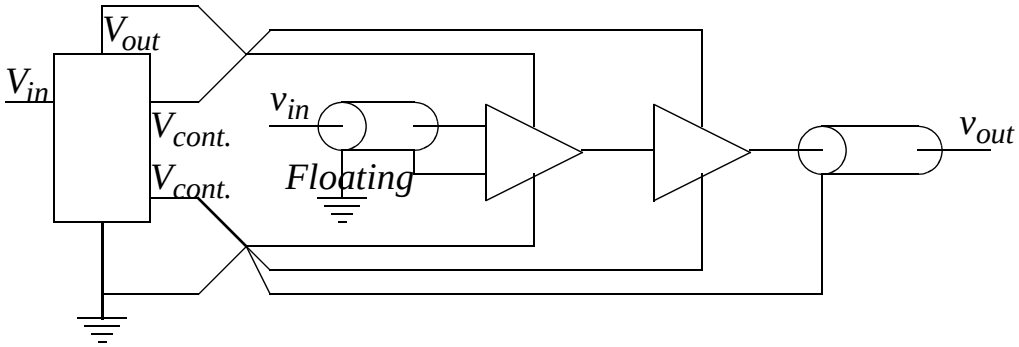

AC Conversion

- The most common AC to DC supply is a linear AC power supply.

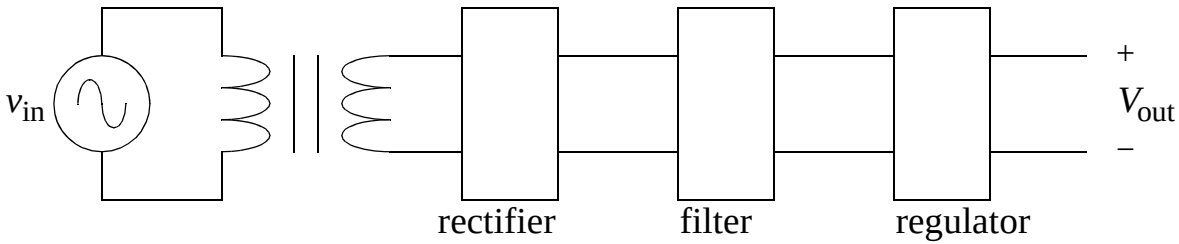

- The input is usually the 120 VAC line voltage.
  120 VAC, 60 Hz, 3-conductors: hot neutral and ground.
  Always use ground and ground the case of instruments.

- Fuses are used to protect the instruments.
  Wall fuses are for fire prevention - too slow to protect electronics.
  A slow-blow 1-amp fuse is faster than a 15-amp wall fuse.

Transformers

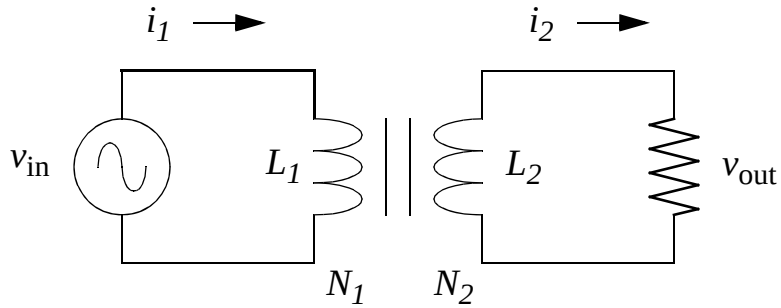

$$v_{in} = -N_1 \frac{d}{dt}(\phi_1)$$

$$v_{out} = -N_2 \frac{d}{dt}(\phi_2)$$

•Transformers are a pair of inductors around a common center used to convert AC voltages to lower or higher values.

- An ideal transformer depends on ratio of turns $n = N_1/N_2$.

$$v_{out}/v_{in} = \frac{N_2}{N_1} = \frac{1}{n} \qquad i_{out}/i_{in} = \frac{N_1}{N_2} = n$$

- The input and output impedance changes through a transformer.

$$Z_{in} = \frac{v_{in}}{i_{in}}$$

$$Z_{out} = \frac{v_{out}}{i_{out}}$$

$$Z_{in} = \frac{v_{in}}{i_{in}} = \frac{v_{in}}{i_{in}}\left(\frac{i_{out}}{v_{out}}\frac{v_{out}}{i_{out}}\right) = n^2 Z_{out}$$

Rectifier

- A full wave bridge rectifier is used in an AC to DC converter.
- Combine a full-wave rectifier with a low-pass filter.

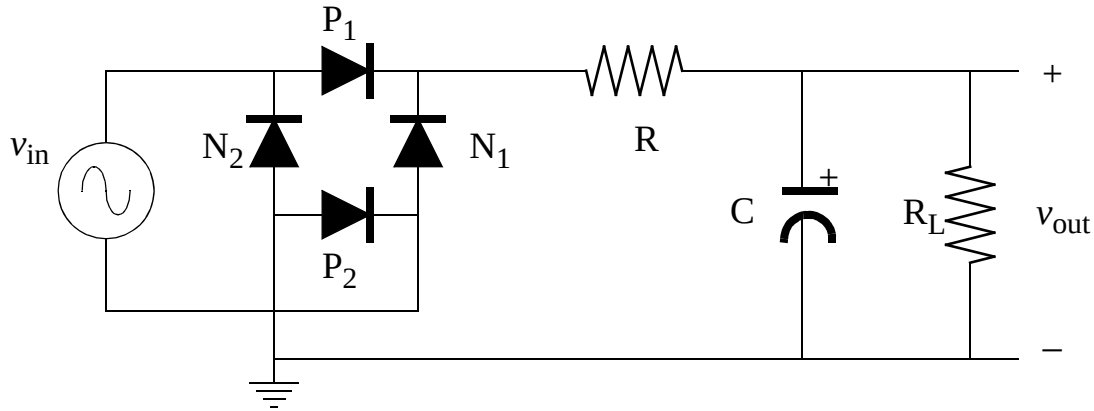

- The low pass filter should have a relatively long time constant $RC \gg \frac{1}{f(v_{in})}$
- The cutoff is illustrated in a low pass Bode plot.

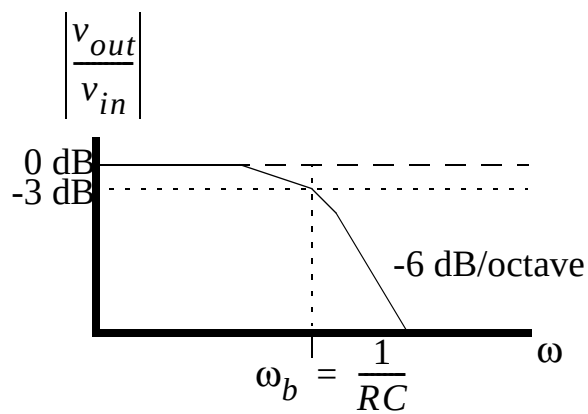

AC Ripple

- The output will still have a “ripple” proportional to V_0/RCf.

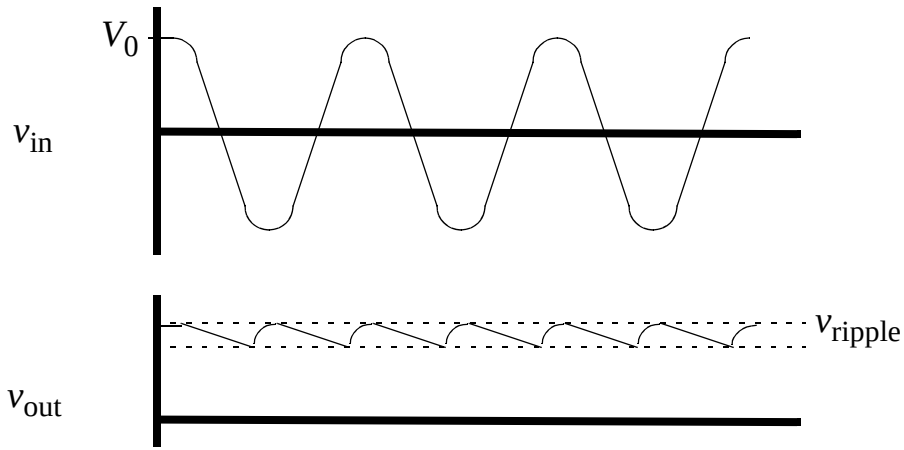

- This is “unregulated” DC.

Switching Power Supply

- A switching power supply uses a feedback loop to control the output.

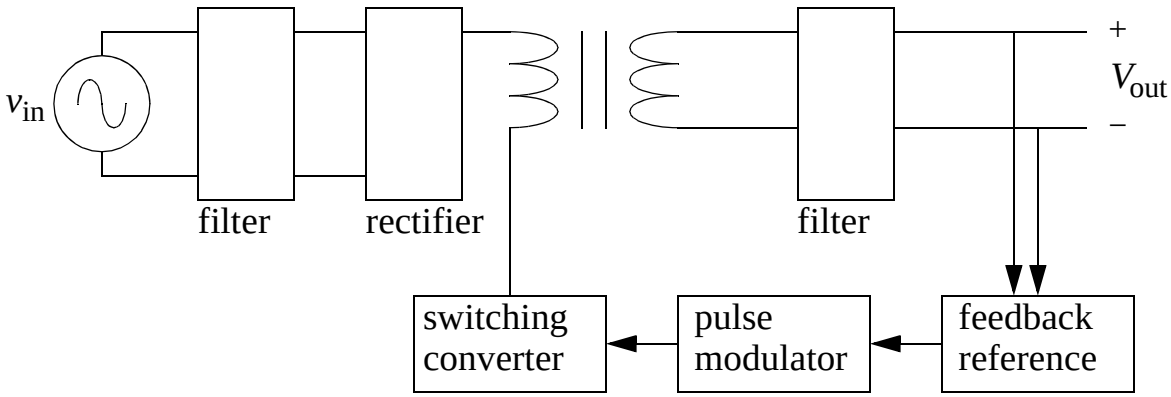

Voltage Regulation

- A zener diode is used to regulate the output voltage
- The zener will draw sufficient current above a minimum to keep the voltage at V_Z.

- A passive voltage regulator uses a zener alone.

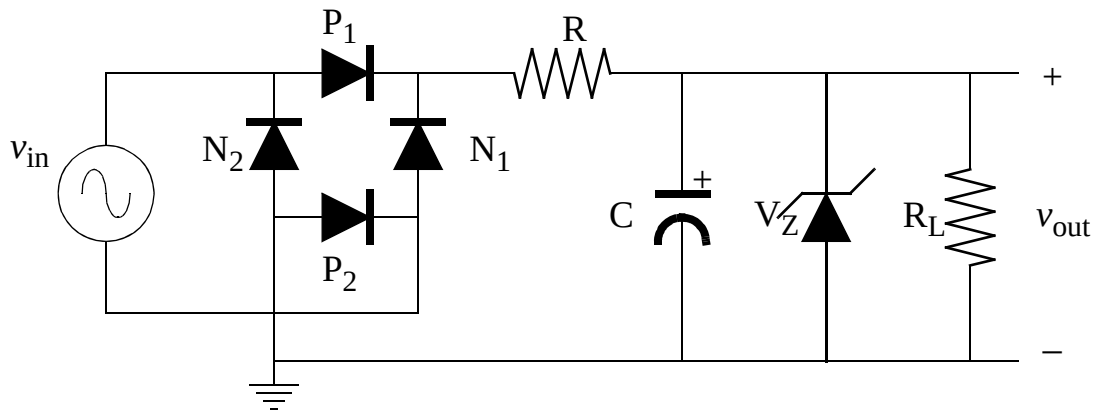

- The rectifier must provide enough voltage to allow the zener to regulate, even at the minimum of the ripple.
- The resistor, *R*, must be small enough to avoid a voltage drop to the zener diode.
- The load will form a voltage divider with the internal resistor *R*.

Active Voltage Regulator

- An active voltage regulator uses feedback through an amplifier.

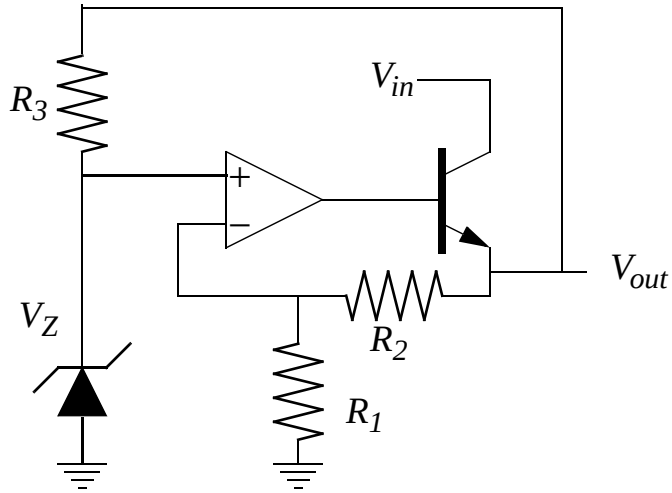

- Negative feedback through R_2 sets the voltage across R_1 equal to V_Z.
- The current through R_1, also goes through R_2 to set V_{out}.

$$V_{out} = V_Z + \frac{V_Z}{R_1}R_2 = \frac{R_1 + R_2}{R_1}V_Z$$

- R_3 sets the current in the zener diode, no voltage divider with the load.

- This is similar to the 3-terminal regulator, LM7805 by National Semiconductor.

Adjustable Voltage Regulator

- A variable resistor can be used to make an adjustable voltage source.

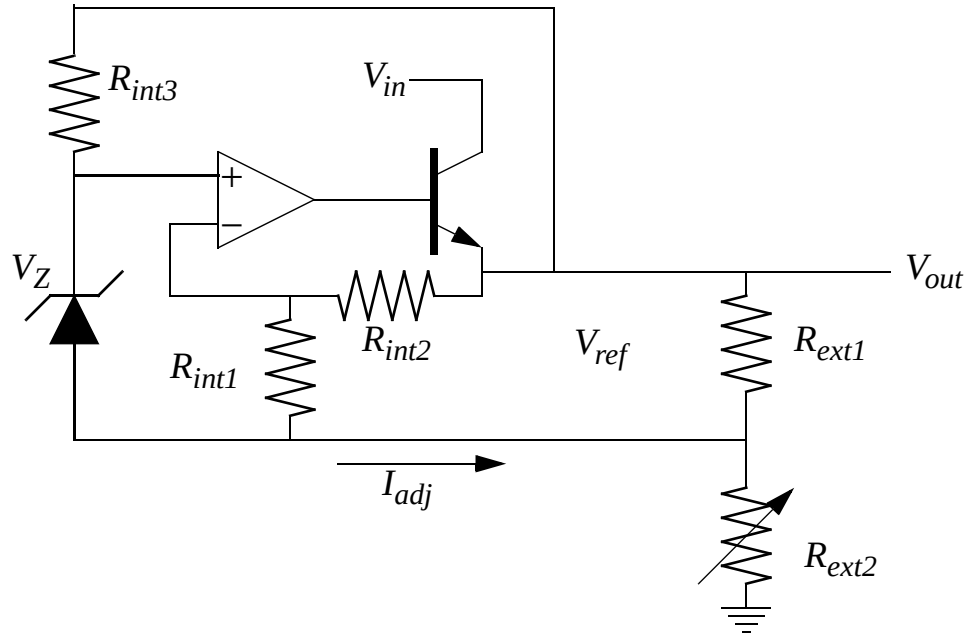

- The main part of the circuit is a fixed voltage regulator that produces a reference voltage, V_{ref}.
- Current, I_{adj}, through R_{int1} and the zener is a constant based on V_{ref}.
- I_{adj} and V_{ref} set the current flowing through the variable resistor.

$$V_{out} = \frac{R_{ext1} + R_{ext2}}{R_{ext1}} V_{ref} + I_{adj} R_{ext2}$$

- This is essentially the 3-terminal adjustable regulator, LM317.

Short Circuit Protection

- A major need for a power supply is to protect active components from short circuits.
- Diodes are used to prevent shorts damaging the regulator.

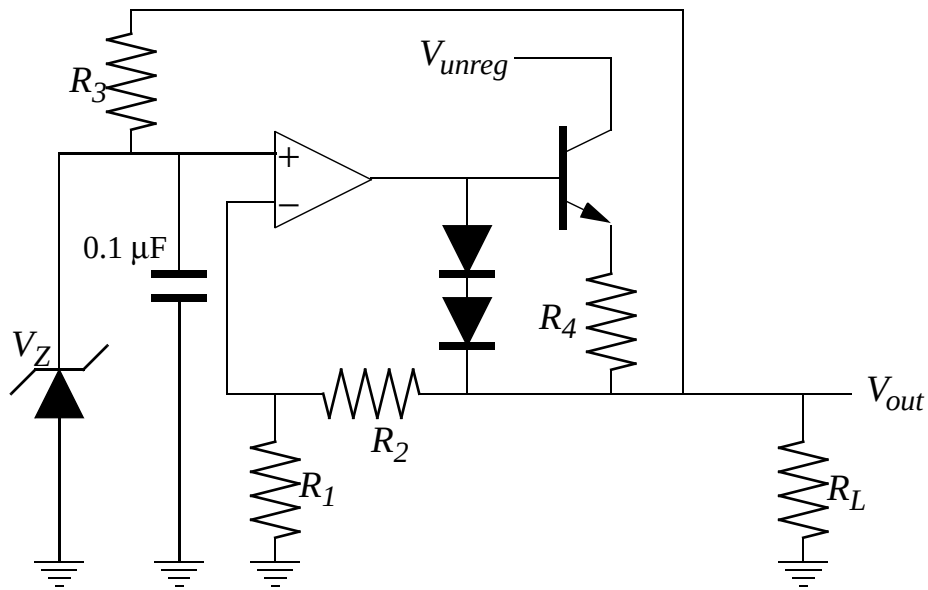

$$V_{out} = \frac{R_1 + R_2}{R_1} V_Z$$

- If R_L is near zero, then there would be too much current drawn.
- Diodes allow second path for current from op amp to load.

Current Regulation

- Some circuits require fixed current.
- Transistor current can be controlled by the base voltage.

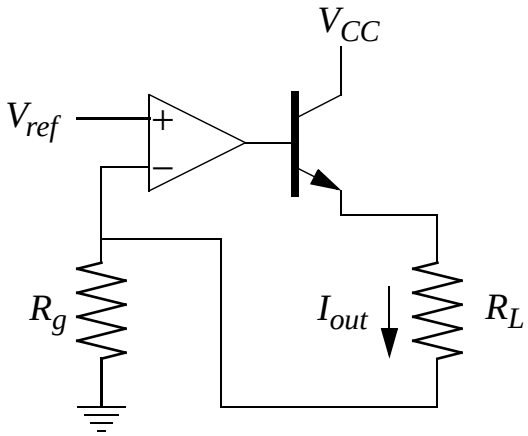

$$I_{out} = \frac{V_{ref}}{R_g}$$

- Use a preset voltage regulator through a fixed resistor also sets a current.

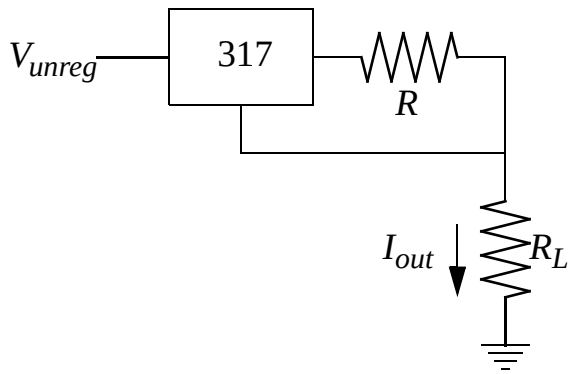

$$I_{out} = \frac{1.25V}{R}$$

Voltage Multiplier

- Two half-wave rectifiers in series can double the voltage out.

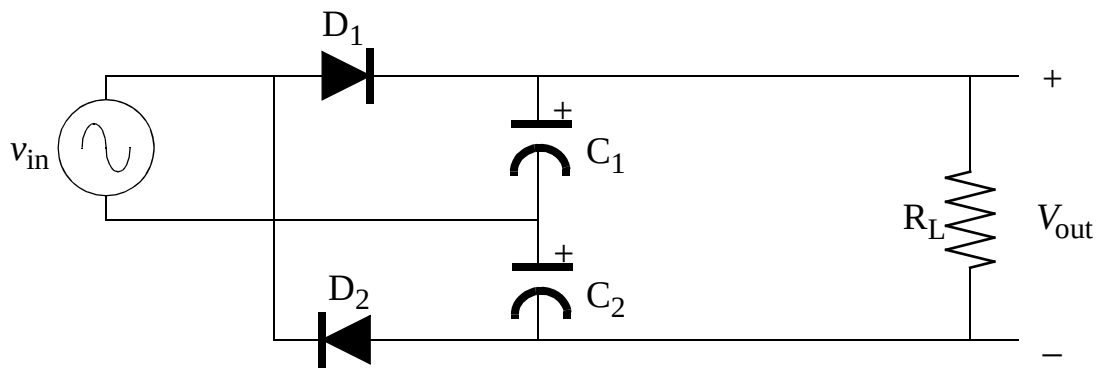

- When v_{in} is positive the current flows through D_1, charging C_1.
- When v_{in} is negative the current flows through D_2, charging C_2.
- The available voltage on each capacitor is V_0 so the total $V_{out} = 2V_0$.

- The process can be extended: *n* capacitors and *n* diodes gives *n* times the input peak voltage.
- Power is conserved, so $V_{in}I_{in} = V_{out}I_{out}$.
- For example, 3 A at 120 VAC in could give 3000 V and 120 mA DC out.