FNPL Spectrometer Recalibration

Kip Bishofberger

version 3.2, August 2002

Introduction

Overview

The spectrometer dipole magnet at the Fermilab/NICADD Photoinjector Lab (FNPL) was recalibrated after some issues were raised during energy measurements. The first time concern was mentioned was when H. Edwards compared 9-cell and spectrometer readings of energy (Aug 28, 2001), where a discrepancy of about 20% existed. I offered to pursue this incertitude.

After initial checks, I noticed egregious differences between the apparatus as I found it and earlier literature. A thorough investigation then ensued to establish a new calibration factor (and to uncover when the calibration factor changed). The rest of this document details these measurements, but the final conclusion of this work is to find that the beam momentum relates to the spectrometer current as $pc/I = 1.614\,\mathrm{MeV/A}$. Before we delve into the sundries of these measurements, a quick calculation based on simple approximations is provided and reveals nearly the same result.

Quick calculation

The momentum of a particle traveling through a dipole magnet obeys the relation

$$pc\,[\mathrm{eV}] = c \cdot B \cdot \rho\ [\mathrm{MKS}]. \tag{1}$$

By quickly estimating the bending radius ρ and the magnetic-field strength as a function of current (B/I), we can get the momentum-to-current ratio p/I that we desire.

First, if we assume that the reluctance of the steel is negligible (that is, $K_m \approx \infty$), the magnetic field can be estimated using

$$B = \frac{\mu_0 N I}{d},$$

where μ is the magnetic permeability of free space, N the total number of turns in the magnet, I the current, and d the gap width. The total number of turns was found to be 696 and the gap width measured as 5.71 cm. Then we derive that the field strength should be about 153 Gauss per Ampere of current.

The bending radius can be similarly estimated by measuring the distance that the beam travels as it bends 45 degrees inside the field and, using simple trigonometry, finding the bending radius. Figure 1 illustrates the geometry, but first we must find the length of travel inside the magnetic field.

The distance between entry and exit was measured to be about 22.5 cm, but fringe fields extend outside the pole itself on either side. A rule of thumb is to assume that these fields extend half of a gap width, or 2.85 cm, on each end. Therefore the total length of the chord in Figure 1 is 28.2 cm. Figure 1 shows how bisecting the chord produces a right triangle with an angle of 22.5 degrees. We can then write that

$$\sin 22.5^\circ = \frac{14.4\,\mathrm{cm}}{\rho},$$

so that the bending radius ρ is 36.8 cm.

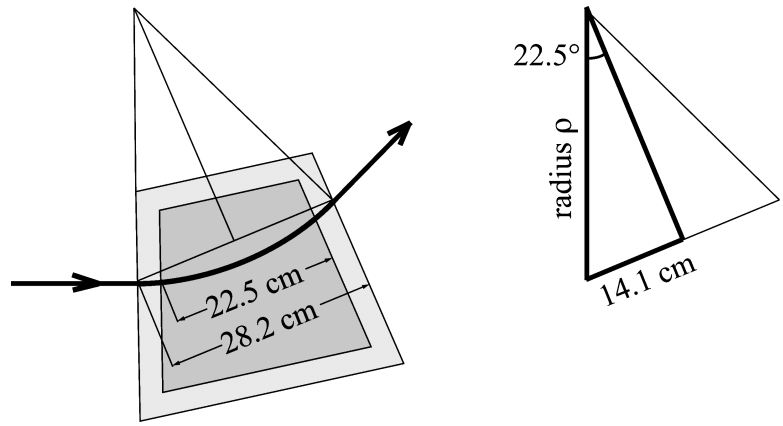

Figure 1. Estimating the bending radius. The distance between entrance and exit is measured, fringe fields are added, and this chord is known to span 45 degrees, so bisecting that length spans 22.5 degrees.

Plugging these approximations into Equation 1, we get

$$pc\,[\mathrm{eV}] = \left(2.998 \times 10^8\right)\left(0.0153 \times I\right)\left(0.368\right) = \left(1.688 \times 10^6\right) \times I\ [\mathrm{A}]\,, \tag{2}$$

or $pc/I = 1.688\,\mathrm{MeV/A}$. We happily note that this is less than 5 % above the result of the long-winded work detailed in the rest of the document. Some conclusions at the end discuss the discrepancies.

Magnetic field strength

Central field

A three-axis Hall probe measured the magnetic field strength between the spectrometer poles. Appendix A describes the probe and its calibration at length, but the measurements were taken roughly centered inside the magnet and along the same horizontal plane as the beamline. Since the vacuum chamber was still in place, it was impossible to measure the field along the trajectory off the beam. Instead, the probe tip was nearly touching the vacuum box to get as close as possible to the real beam area.

Figure 2 shows the data collected for currents ranging from zero to ten amps. The reported field was quite linear, and the next section will discuss the small hysteresis effect observed. Fitting a line to this data yields a field-to-current ratio of $B/I = 145.6 \pm 0.7\,\mathrm{G/A}$.

The "current" used in this data is the number typed into the computer; however, this value was verified by measurements of the circuit itself, and the discrepancy was less than 0.3 %, well beneath other issues. Nevertheless, the result of 145.6 G/A deviates significantly from previous measurements; Appendix B compares these results and provides a historical perspective.

Hysteresis

Fortunately, hysteresis affects the field strength no more than 25 Gauss, and that was found only by ramping the magnet through the entire range. Figure 2 illustrates how this was measured. The current started at 10 A, was decreased to zero, raised back to ten, and again decreased to zero. At every integer value, the field strength was measured.

Several conclusions should be noted. Both of the downward ramps gave fields within one or two Gauss of each other; thus repeatability is nearly ideal. Secondly, the difference between down and up,

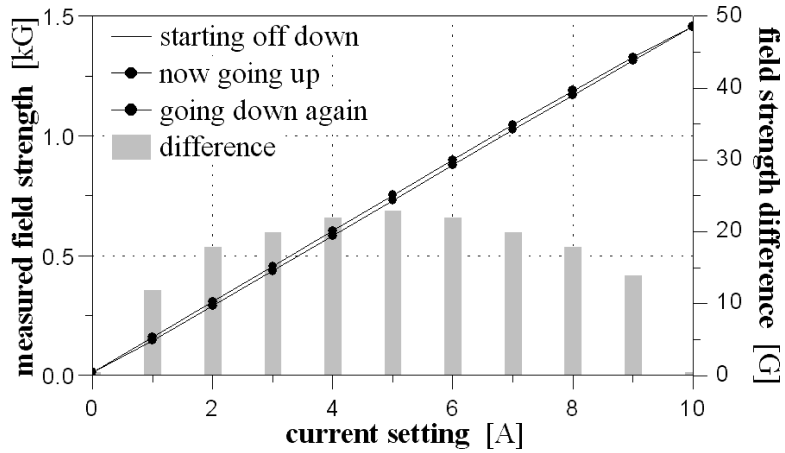

Figure 2. Dependence of the central field strength on current. The data shows a very linear dependence on current and only small hysteresis effects.

shown in the gray columns, never exceeds 25 G and is less than 15 G near the 9.5 A typically run for experiments. Expressed as a percentage, the field strength can vary a total of only 1.1 % maximum above 9 A, and of course only if the spectrometer is ramped through its full range.

For normal operation that rarely uses current less than 8 A or above 9.5 A, hysteresis fortunately plays an insignificant role. In the rare case that experiments are running at extremely low energies, the percentage error of the magnet due to hysteresis becomes quite significant. Proper conditioning and treatment is necessary for meaningful results.

Fringe field

The three-axis probe mentioned earlier was set on a sliding stage to measure the fringe field outside of the pole pieces. The stage moved in the horizontal plane of the beam parallel (and almost against) the beam pipe. Positions were specified with respect to the edge of the pole piece, and the results are displayed in Figure 3.

After this data was collected, the fringe field data was integrated to find $\int B\, d\ell$. The extent of the hard-edge approximation (shown in Figure 3 as the solid line) was calculated to be 3.14 cm. For comparision, the half-gap-width approximation is also indicated with a dotted line.

Independent calculations of the hard-edge approximation for various currents were done, and the standard deviation was within 1 % and appeared purely statistical.

Transverse uniformity

It must be noted that the probe was moved along the side of the vacuum chamber, which is a good inch from the center of the beam pipe, where the beam witnesses the field. It was decided not to move the magnet to make measurements at the critical place (moving it is a significant project, and placing it back at the identical place would be more challenging). Instead, I measured the field at various places horizontally places acros the pole face (along $\hat{x}$).

Figure 4 depicts the change in the magnetic field along the transverse direction. Overlaying a sketch of the beam pipe, chamber, and the pole pieces provides perspective to the picture. The field values are in units of percentage away from the nominal value measured next to the chamber (and therefore identically equal to zero vertically).

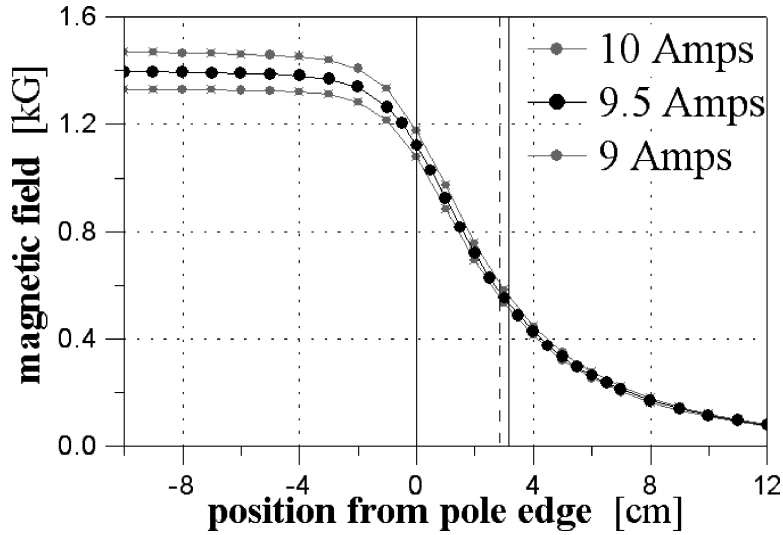

Figure 3. Magnetic field strength along the longitudinal axis. Similar data was taken for 0, 1, . . . , 10 amps, which was found to be very linear with the current setting.

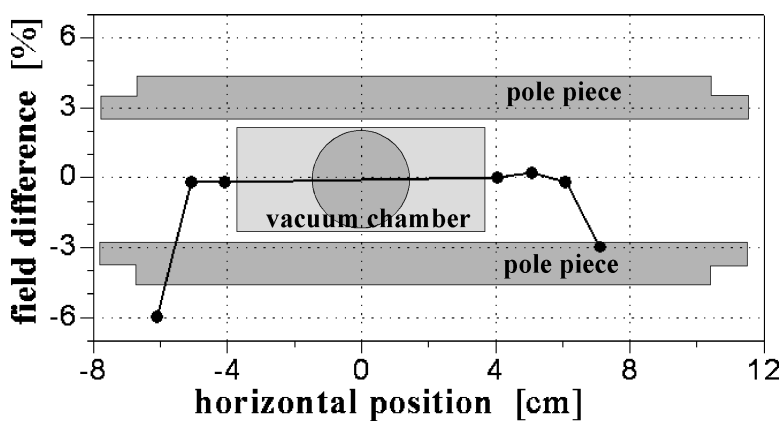

Figure 4. Dependence of field strength on transverse position. The beam pipes, vacuum chamber, and magnet pole pieces are sketched in for perspective. It is conjectured that the field at the center of the beam pipe is the same as at the measurement position (at $x = +1.6\,\mathrm{cm}$) more than half a percent.

Near the ends of the pole pieces, the field begins to fall off on the order of five percent. However, it appears that the field is quite flat inside the inner region, and therefore I believe the field at the critical point of the beam is within several tenths of a percent from the measurements.

Magnet position

Displacement

A large part of the motivation for this report derives from the spectrometer magnet being in a position other than previously suggested. Appendix B discusses the lore and mythology of the magnet location; for now I simply describe the position as I have determined it. I found that the

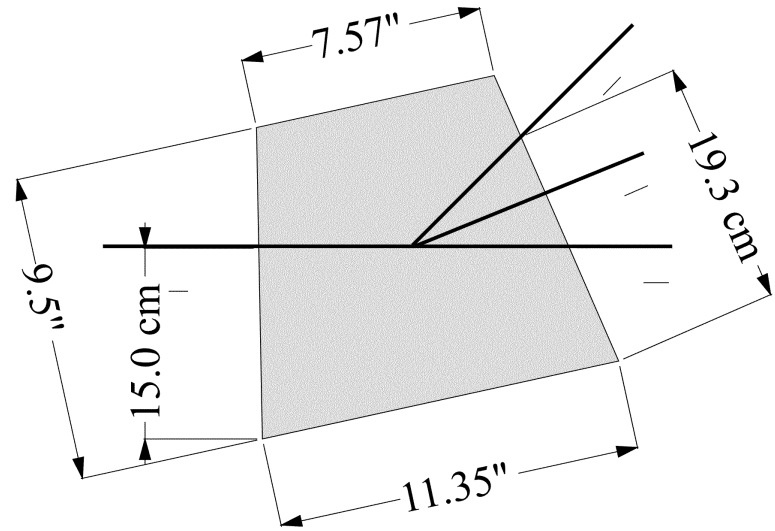

Figure 5. The dimensions of the spectrometer pole pieces. The edges were designed to angle at 22.5 degrees in order to simplify energy measurements via and additional exiting pipe located at 22.5 degrees (also shown). However, this exit was never used.

center of the entering beam pipe is located 15.0 cm away from the outside corner of the pole piece, and similarly the exiting beam pipe measures 19.3 cm away from the other outside pole corner.

The drawing that the machine shop used to make the pole pieces is shown in Figure 5. From this information and the measurements listed above, a 45° bend perpendicularly incident to the spectrometer magnet is completely determined, and we can calculate the bending radius.

Additional geometry issues

Two other observations obfuscate our conclusions. First, careful measurements of the straight-line trajectory through the magnet revealed an additional angle of about 1° between it and the pole perpendicular. These cautious measurements utilized scribe marks on the vacuum chamber signifying the center of each beam line.

Another concern was the fact that there is no guarantee that the beam itself exits at truly 45 degrees; all that we know is that the beams strikes (roughly) the center of the screen at cross S3. The screen was assured to be well-centered, so I decided to embark on a fastidious mission.

I ignored the whole 45° business, found the hard-edge approximation boundaries of the magnet, and fitted a circle to the entry point and the exiting point such that the circle was tangent to the incoming beam, and the tangent at the exit point intersected the screen center. This is the true path of properly steered electrons, assuming they already arrived at the spectrometer centered and parallel to the pipe. All of this work was simple to do using a CAD program (I used MiniCAD 7 on my trusty Macintosh G4), while by hand would be a geometry student's nightmare. After beaming with joy when my computer announced the answer, I noticed it was less than 1 % away from the significantly simpler model espoused earlier.

Figure 6 illustrates the final geometry of the entire system. The magnet pole is centered, and the fringe field is drawn on either side. The beam enters from the left, bends roughly 45 degrees, and exits along a tangent from where that arc crosses the fringe field. The operator adjusts the magnetic

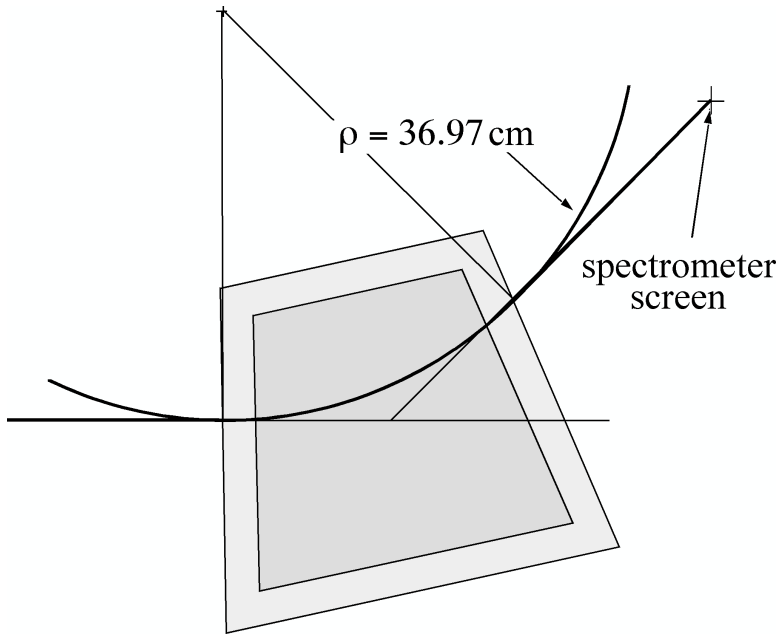

Figure 6. Final geometry as computed by a CAD program. By forcing the bending arc to be tangent at the entrance and at the exit, the radius was determined to be 36.97 cm, almost 5 % away from earlier assumptions.

field, which adjusts the arc curvature, such that the exiting tangent crosses the screen center, marked with a cross.

Results and comparisons

Having derived the bending radius ρ to be 36.97 cm and the field strength to be 145.6 G/A, we can plug these results into Equation 1 and find our true spectrometer calibration factor to be

$$p\,[\mathrm{eV}] = \left(299.8 \times 10^8\right)\left(0.01456 \times I\right)\left(0.3697\right) = \left(1.614 \times 10^6\right) \times I\ [\mathrm{A}]\,,$$

which is discernably different than the back-of-the-envelope estimate outlined by Equation 2. It is not surprising that the actual field measured is significantly less than theory predicts for two reasons. First, the finite reluctance of the iron would cause less field than the simplified model predicts. Second, the model assumes pole pieces that do not widen out (in fact, the ideal situation is to have pole tips that narrow to the gap), but the actual spectrometer spreads the magnetic flux through the large pole tips. To conserve energy, we expect the average field density measured by the probe to be decreased.

The difference between these measurements and previous attempts is more disheartening, and Appendix B discusses this disparity.

A valuable check of these energy measurements is to compare them to the 9-cell measurements; by changing the set point voltage in the 9-cell, we change the energy gain of the beam. This energy is supposedly known via the transmitted power detector and some factors, handed to the group from DESY, that relate to the gradient.

Figure 7 shows the results of this cross-check. The momentum measured by the spectometer is converted to energy (the full relativistic conversion was used, though $E \sim pc$ changed the results by

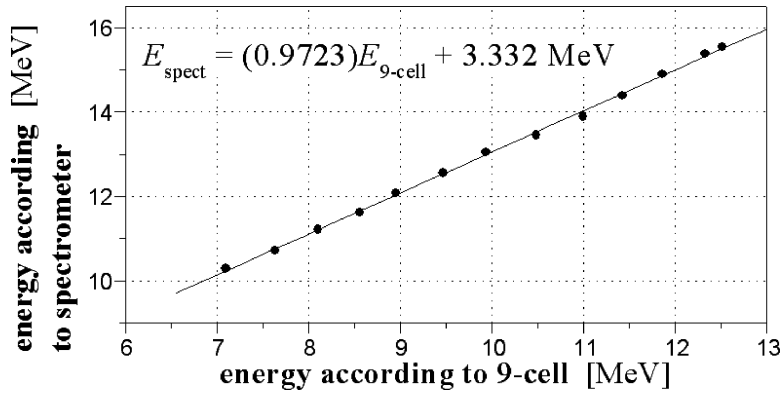

Figure 7. Correlation between 9-cell and spectrometer energy readings. Equal readings of energy gain in the 9-cell and the spectrometer would appear as a slope of unity. Both axes represent total beam energy.

less than 0.3 %) and plotted against the energy gain in the 9-cell measured by the transmitted power. If everything were correct, we would see a line with slope of unity and a vertical offset of the energy provided by the injector.

Unfortunately, a discrepancy of over 3 % exists. I believe that the spectrometer is now well-understood, while the 9-cell is a mysterious beast whose energy calibrations have large and unknown error bars. It is left as an excercise to the interested reader to somehow recalibrate the 9-cell. If after that, there is still a discernable dispute between the two devices, then I can pursue the matter further.

Appendix A: Magnetic probe calibration

The probe that I used was a three-axis Hall-effect probe built by Lakeshore and borrowed from V. Shiltsev in the Electron Lens group. It has a zeroing procedure which I followed to a 'T' and had the probe checked by technical division and a couple standards, which confirmed its accuracy to better than 0.5%. The mechanism provides quadrature-summing ($\sqrt{x^2 + y^2 + z^2}$), which was the readout used in these measurements.

The probe previously used to measure the magnetic field strength could not be found, as discussed in Appendix B below. Therefore the large discrepancy between my field measurements and J.P. Carneiro's cannot be explored further.

Appendix B: Spectrometer calibration history

Remembering the past is important both to compare future measurements with past conclusions and to pacify doubts and concerns. There are three main issues that I found discernably disparate from earlier measurements or assumptions. First, this is the first attempt to measure the fringe field and calculate the effective hard-edge approximation. Before this time, half of the gap width was always used. This effects the bending radius by a couple percent.

Second and more problematic is the field strength as a function of current. A technical note (#EXP-198) describes some calibrations before the magnet poles were manufactured. Once they were installed, the field strength used was what the simple model predicted, namely 153 G/A.

A year later, J.P. Carneiro used a probe that he recalls borrowing from H. Pfeffer in EE Support. He took a lot of data and spanned +10 A to −10 A (Logbook #1, pp. 172 –) and ended with a factor of 162 G/A. The field measured by this probe is strikingly dissimilar from the results reported here. I attempted to find the old magnetic probe, but sadly H. Pfeffer has no recollection of any magnetic probe.

The third surprise in this note is the displacement of the magnet from its intended location. After numerous discussions with everyone even remotely associated with the inital placement of the magnet or subsequent maintenance, I believe that its position has always been as described above.

The original design was to have a bending radius of 37.97 cm, which agrees with a template that the magnet rests on and agrees with. However, the template indicates a beam line about 3.34 cm away from the actual beam line; the tick marks parallel to the beam line in Figure 5 illustrate this discrepancy. A year later an attempt was made to confirm this radius, but the drawings were not accurate and the original value was retained.